CT9100MP
CROSSTRAINER

CT91MP-100-3

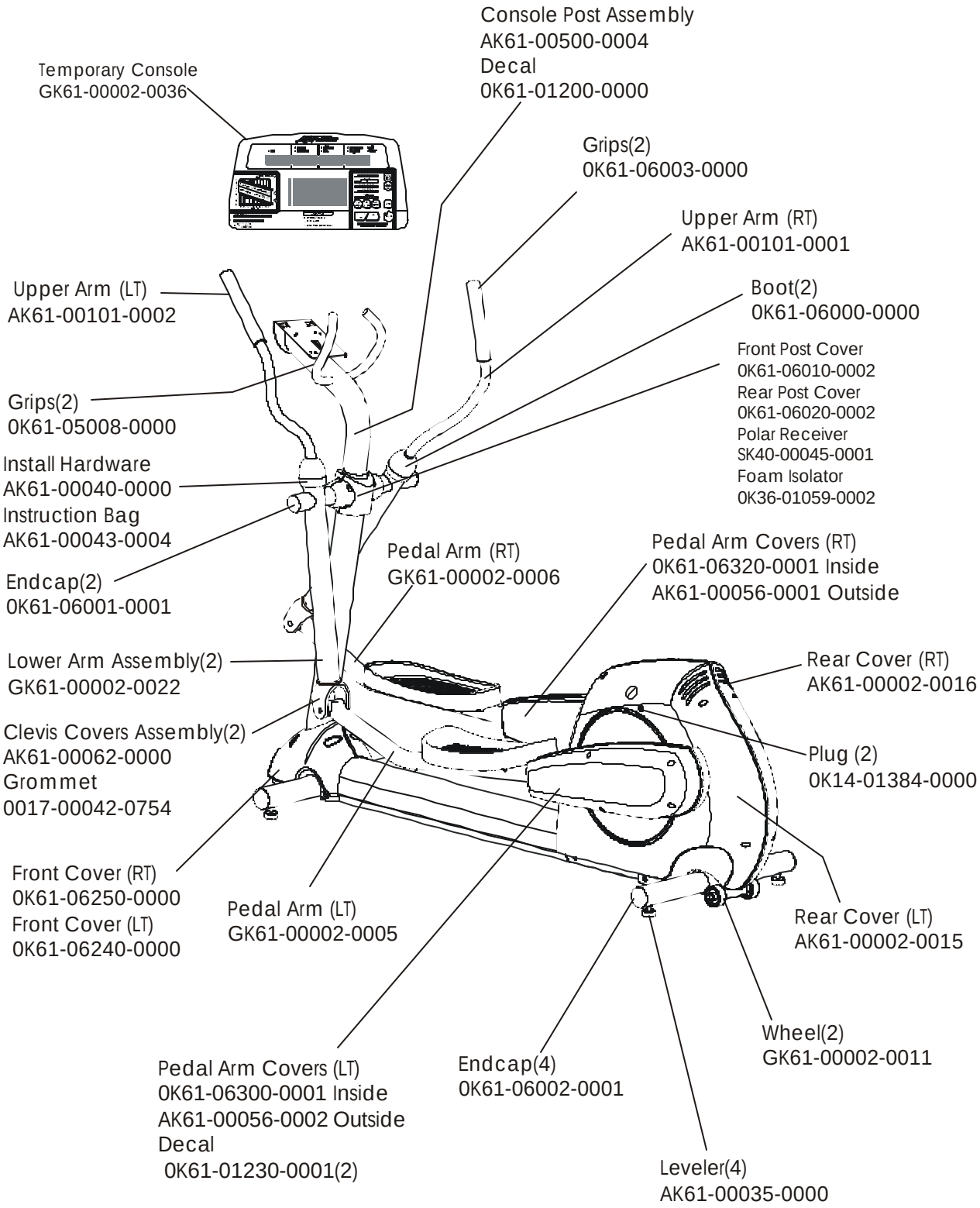

Revision Date: 2/8/01

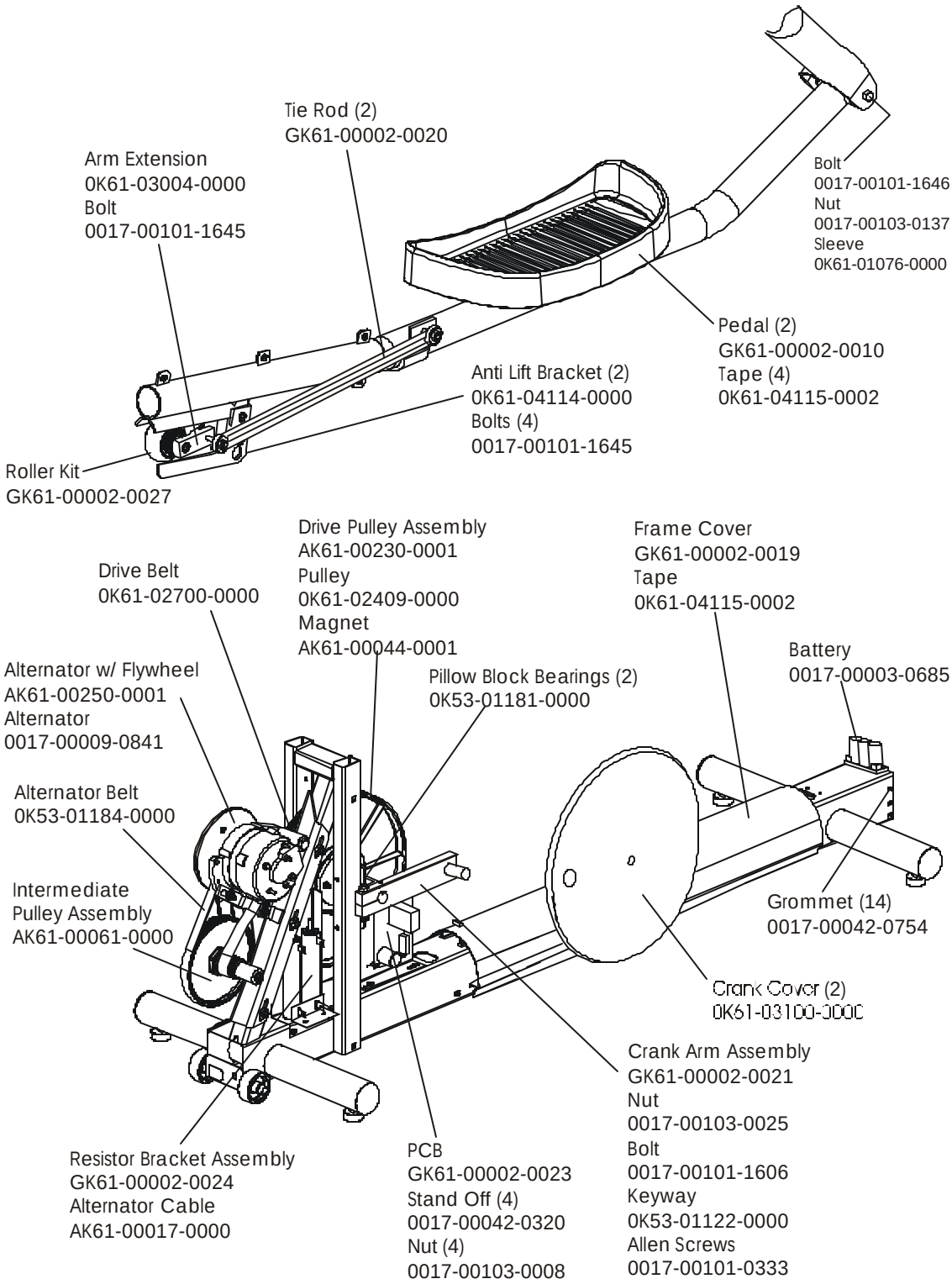
Tie Rod (2)
GK61-00002-0020
Arm Extension
0K61-03004-0000
Bolt
0017-00101-1645
Bolt
0017-00101-1646
Nut
0017-00103-0137
Sleeve
0K61-01076-0000
Pedal (2)
GK61-00002-0010
Tape (4)
0K61-04115-0002
Anti Lift Bracket (2)
0K61-04114-0000
Bolts (4)
0017-00101-1645
Roller Kit
GK61-00002-0027
Drive Pulley Assembly
AK61-00230-0001
Pulley
0K61-02409-0000
Magnet
AK61-00044-0001
Frame Cover
GK61-00002-0019
Tape
0K61-04115-0002
Drive Belt
0K61-02700-0000
Battery
0017-00003-0685
Alternator w/ Flywheel
AK61-00250-0001
Alternator
0017-00009-0841
Pillow Block Bearings (2)
0K53-01181-0000
Alternator Belt
0K53-01184-0000
Intermediate
Pulley Assembly
AK61-00061-0000
Grommet (14)
0017-00042-0754
Crank Cover (2)
0K61-03100-0000
Crank Arm Assembly
GK61-00002-0021
Nut
0017-00103-0025
Bolt
0017-00101-1606
Keyway
0K53-01122-0000
Allen Screws
0017-00101-0333
Resistor Bracket Assembly
GK61-00002-0024
Alternator Cable
AK61-00017-0000
PCB
GK61-00002-0023
Stand Off (4)
0017-00042-0320
Nut (4)
0017-00103-0008